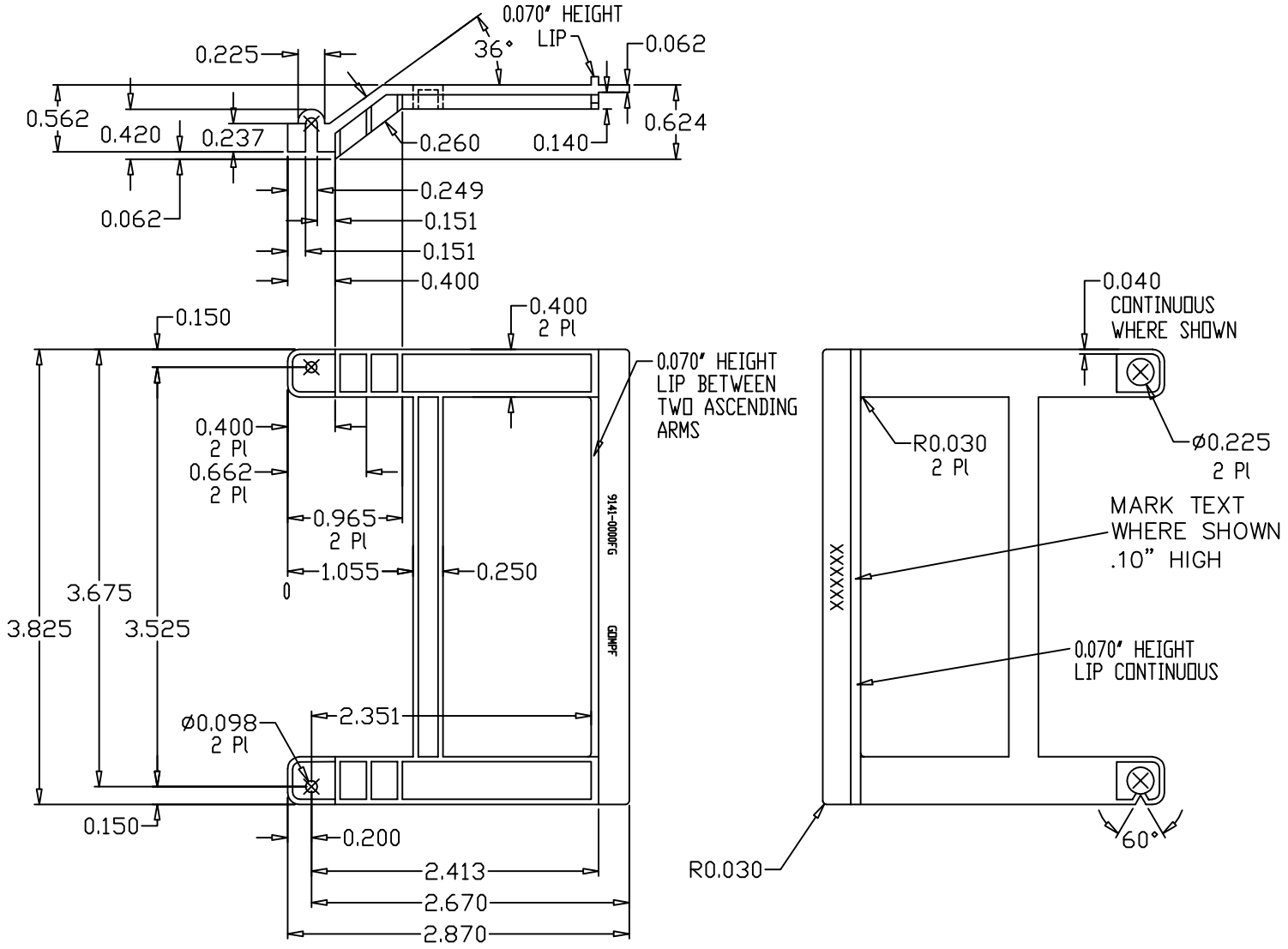

TOLERANCES:
STD. TOL'S. +/- 0.010
RAD. TOL'S. +/- 0.010
HOLE TOL'S. +/- 0.005
MAT. TOL'S. +/- 0.002

MATERIAL: RED UL94V-0
WITH 10% FIBERGLASS ADDED

CONTRACT NO.:	
APPROVALS:	DATE:
DRAWN BY: VW	6/20/03
CHECKED:	

COPYRIGHT PROTECTED

SCALE: 0.67:1

GOMPF BRACKETS, INC.
12426 Mukilteo Speedway Ste C
Mukilteo, WA 98275

Phone: (425)348-5002 Fax: (425)348-5150

DWG. NO. 9141-0000FG PCI/ISA RETAINER

REV. 0